Technical data sheet

DTC
Truss Clip

DTC truss clip is used to provide alignment control between a roof truss and non-bearing walls.
The 38mm slot permits vertical truss chord movement when loads are applied.
To allow for vertical truss movement, fasteners into the truss or rafter should not be driven completely flush against the connector

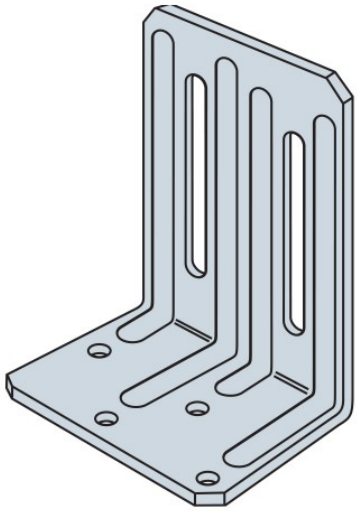

Features

Benefits

The 38mm slot permits vertical truss chord movement when loads are applied.

Material

- Pre-galvanised mild steel.

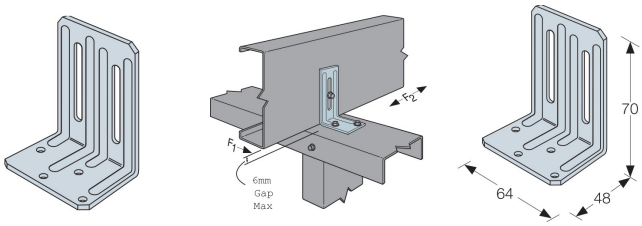

Technical Data

Product Dimensions

References	Hanger Dimensions [mm]				Holes	
	A	B	C	t	Flange A	Flange B
					Ø4.3x43 Slot	Ø4.3
DTC	70	48	64	1.3	2	4

Performance Values - Truss to Timber Stud Wall

References	Fasteners		Safe Working Loads [kN]						Characteristic Capacities [kN]					
	Flange A (N3.35x65)	Flange B (N3.35x65)	Without Gap		6mm Maximum Gap		12mm Maximum Gap		Without Gap		6mm Maximum Gap		12mm Maximum Gap	
			$R_{1,ST}$ SWL	$R_{2,ST}$ SWL	$R_{1,ST}$ SWL	$R_{2,ST}$ SWL	$R_{1,ST}$ SWL	$R_{2,ST}$ SWL	$R_{1,K}$	$R_{2,K}$	$R_{1,K}$	$R_{2,K}$	$R_{1,K}$	$R_{2,K}$
DTC	2	4	0.6	0.9	0.4	0.6	0.2	0.3	1.2	1.9	0.8	1.2	0.5	0.7

1. Truss to rafter must bear on top plate to acheive the aloowable loads under 'without gap'
2. Clips are required on both sides of the truss to acheive F1 loads in both directions (stagger parts to avoid nail interferences)
3. Install slot nails in the middle sof the slot. Nails should not be driven completley flush against the connector to allow for vertical truss movement.
4. Products not intended for floor applications due to the frequency of floor joist deflections and potential for sqeaks
5. Allow up to the 1.5mm gap between nail head and truss clip to help prevent squeaking

LGS Performance Values - DTC to Stud

References	Fasteners		Safe Working Loads [kN]						Characteristic Capacity [kN]					
	Flange A (X1214D325)	Flange B (X1214D325)	Without Gap		6mm Maximum Gap		12mm Maximum Gap		Without Gap		6mm Maximum Gap		12mm Maximum Gap	
			$R_{1,SWL}$	$R_{4,SWL}$	$R_{1,SWL}$	$R_{4,SWL}$	$R_{1,SWL}$	$R_{4,SWL}$	$R_{1,k}$	$R_{4,k}$	$R_{1,k}$	$R_{4,k}$	$R_{1,k}$	$R_{4,k}$
DTC	2	4	0.9	0.7	0.9	0.7	0.6	0.7	1.4	1.1	1.4	1.1	1	1.1

1. Truss or rafter must be bearing on top plate to achieve loads under 'Without Gap'
2. Clips are required on both sides of the truss to achieve R4 loads (stagger parts to avoid screw interferences)
3. To allow for vertical truss movement, screws into the truss or rafter should not be driven completley flush against the connector

Installation

Installation

To allow for vertical truss movement, screws into the truss or rafter should not be driven completely flush against the connector.

Winchester Road Cardinal Point Tamworth Staffordshire B78 3HG
tel: +44 1827 255600
fax: +44 1827 255616