Fastening pattern

REV	0
REV DATE	24/10/25
DWG NAME	C_PBH120_2D0_NP_PTRS-UK

Item	=	PBH120G	
Fasteners	=	Timber to rigid support	Column to rigid support
Type of fastening	=	-	

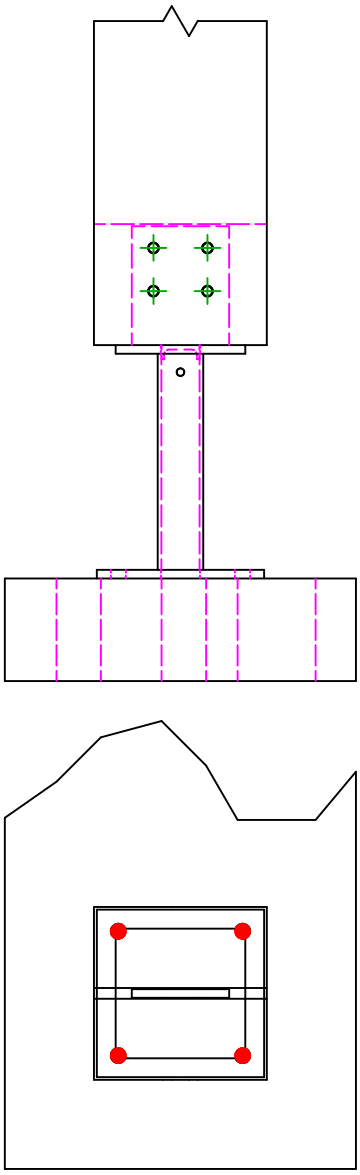

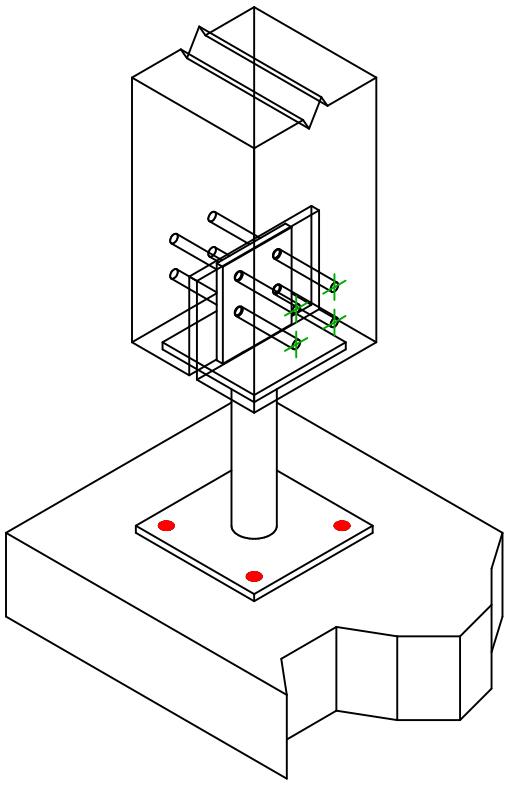

	Symbol	Fasteners	Items	Qty
Header Fastener(s)		**FM**	**FM-753 M12x110/20 3DG**	**4**
		-	-	
		-	-	

	Symbol	Fasteners	Items	Qty
Joist Fastener(s)		**STD**	**STD8**	**4**
		-	-	